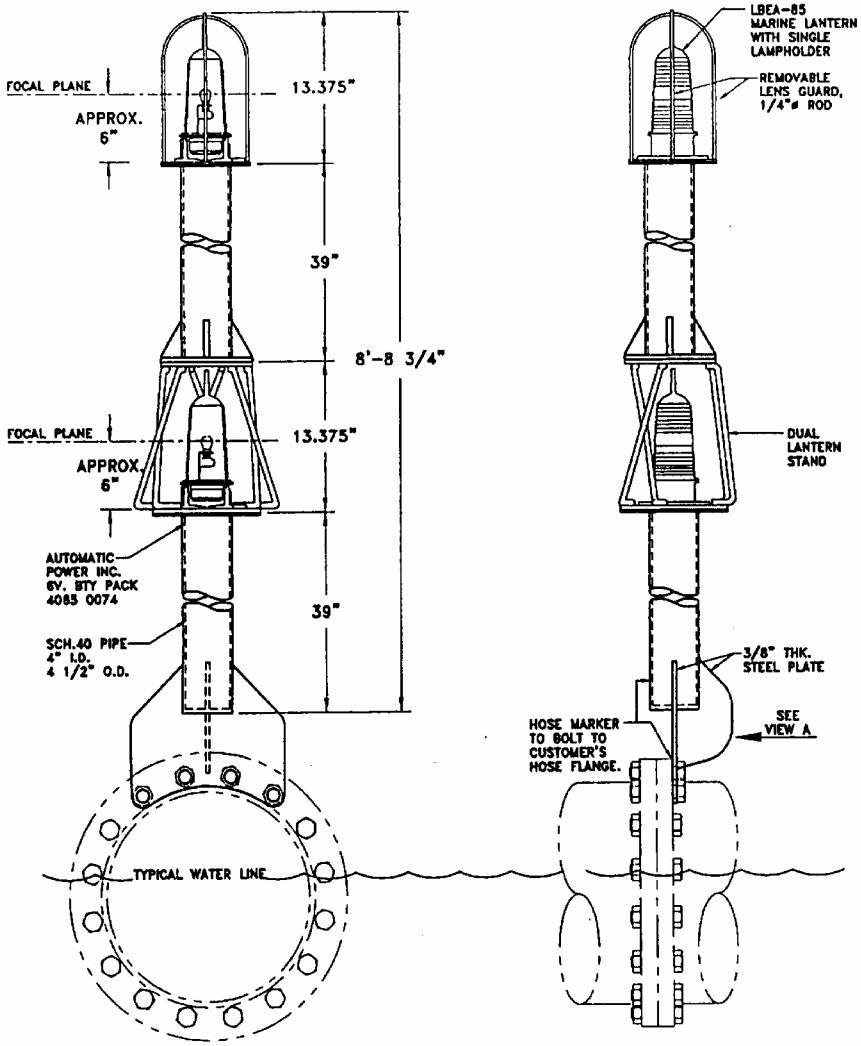

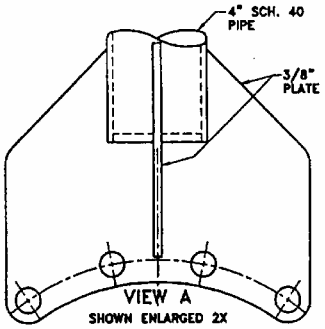

CUSTOMER TO SPECIFY:

_____ inch diameter hose with a _____ pound rated flange.

EXAMPLE:

20 inch diameter hose with a 150 pound rated flange.

BATTERY PACK WEIGHT = 9 LBS

SHEET 5

Automatic Power Inc
213 Hutcheson Street, Houston, Texas

CUSTOMER INFORMATION,
LBEA-85 DIMENSIONAL OUTLINE FOR
DUPLEX RED DREDGE PIPELINE LIGHT

DRAWN BY J.G.	ORIGINATOR S.T.	DRAWING No.	
DATE 11-11-99	CHECKED	M-5270-C	
API SF 7	APPROVED		